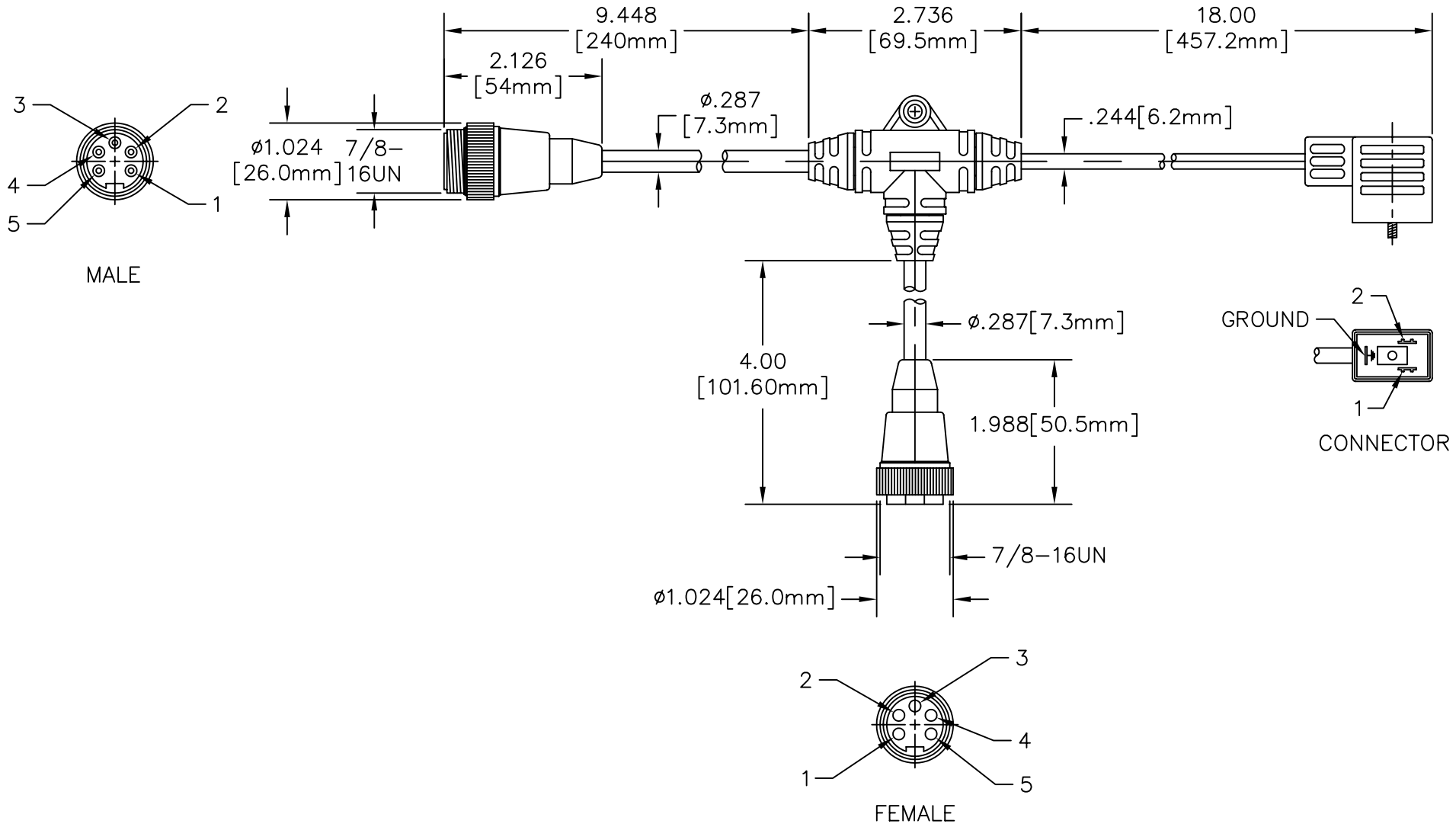

REVISION LEVEL														
#	RFQ	RFT	RFP	1	2	3	4	5	6	7	8	9	10
BY													
LOG #													

DRAWN BY C MOSU
DATE 4/20/04
CHECKED BY P TUBB
DATE ?
APPROVED BY J CURTIN

TOLERANCES

SENITEC CORP.

NORCROSS, GEORGIA U.S.A. 30071

THE INFORMATION CONTAINED HEREIN IS CONFIDENTIAL AND IS NOT TO BE COPIED, NOR CONVEYED IN ANY MANNER WHICH WOULD VIOLATE ITS PROPRIETARY NATURE WITHOUT THE PRIOR WRITTEN CONSENT OF SENITEC CORPORATION.

DO NOT SCALE
SHEET A / A

AC/DC CORD SET–"T"

MATERIAL

PART NO.

DRAWING NO.

REV.